Sylflat IP44 DIM

IS**16107**A

0053973 0053974
0053975 0053976
0053977 0053978

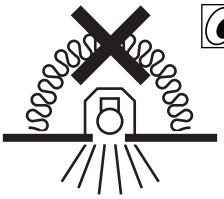

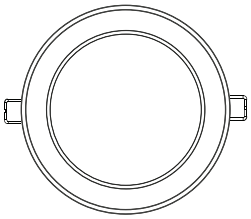

1

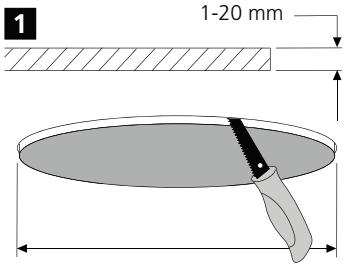

Ø155 - 0053973, 0053974
Ø205 - 0053975, 0053976
0053977, 0053978

2

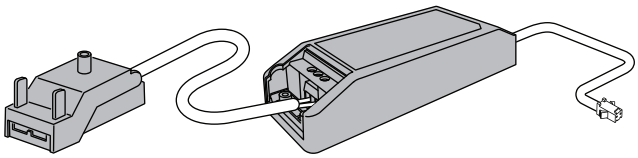

3

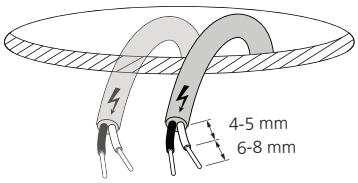

4

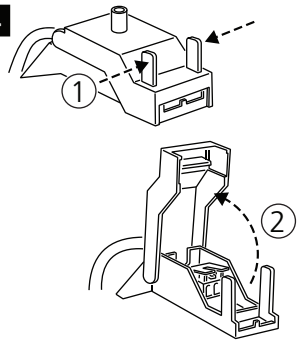

5a AC 220-240V

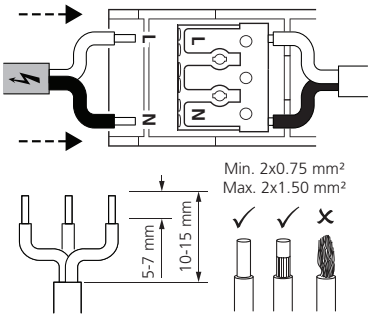

5b AC 220-240V

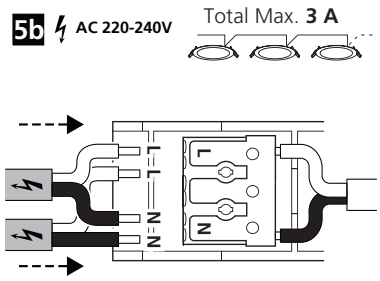

6

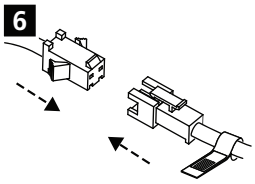

7

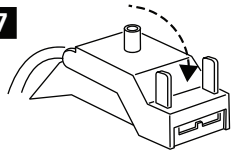

8

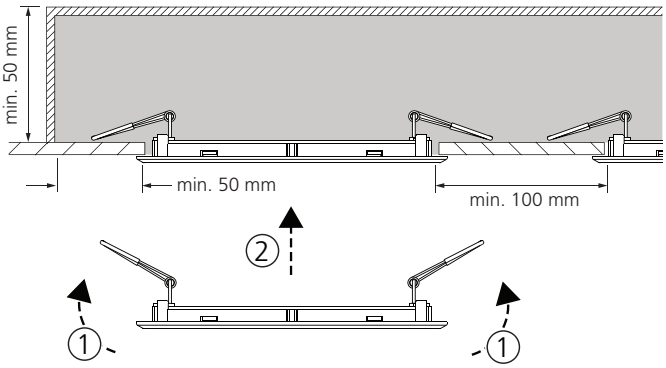

SYLVANIA

Feilo Sylvania Europe Limited
Avis Way, Newhaven East Sussex BN9 0ED UK
www.sylvania-lighting.com

03.18