A	B	C	D	E	F	G	H	J	K

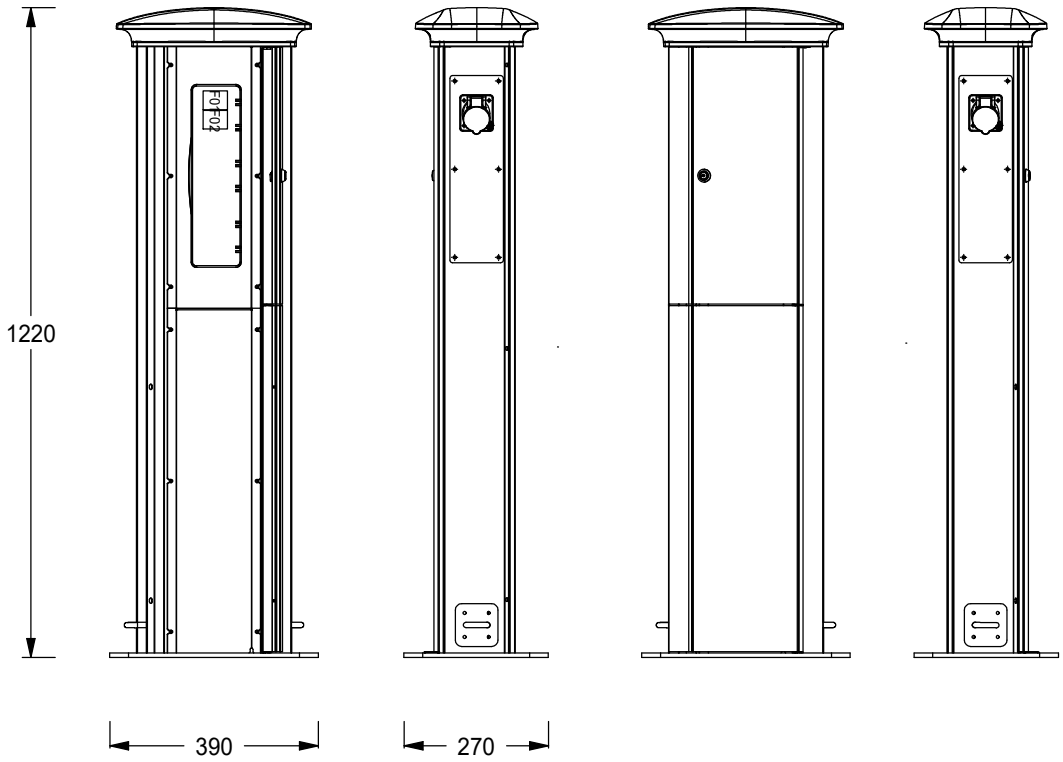

ARTIKELNR./
ARTICLE NO.
EB10082

MÄRKSTRÖM/
CURRENT RATING
32 A

MEASURING EQUIPMENT

CURR.-TRAFO-SPACE	ENERGY-METER-SPACE

FAST ANSLUTNING/
FIXED CONNECTIONS

<125A	>125A

CEE-OUTLETS
3-POLE/230V

16A	32A	63A	125A
2			

SCHUKO OUTLETS
2-POLE/230V
16A

CEE-OUTLETS
5-POLE/400V

16A	32A	63A	125A

JFB/RCCB

<0,03A	>0,3A	>0,03A & <0,3A
2		

JFB/RCCB
Variable

VIKT/WEIGHT
21,5 kg

This drawing is property of El-Björn. May not be copied, shown or distributed without our written permission.

Alfa-II 400//(2)-2 EN

EL-BJÖRN
www.elbjorn.com

RITAD AV/DRAWN BY	DATUM/DATE	NEXT SHEET	SHEET
CG	170307	2	1
SIGN	REVISION/ISSUE	RITNINGS NR./DRAWING	
	A*	EB10082	

A	B	C	D	E	F	G	H	J	K

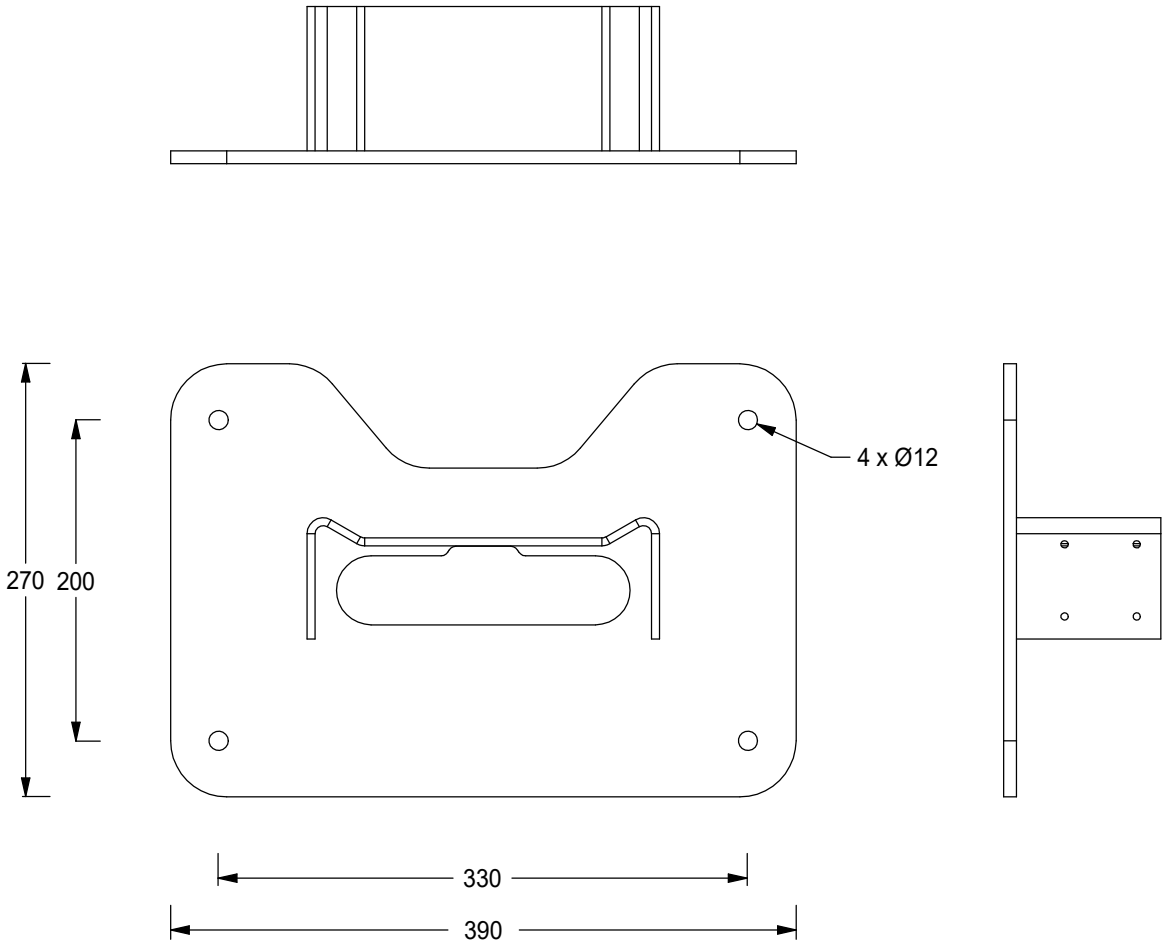

ARTIKELNR./
ARTICLE NO.
EB10082

MÄRKSTRÖM/
CURRENT RATING
32 A

MEASURING EQUIPMENT
CURR.-TRAFO-SPACE | ENERGY-METER-SPACE

FAST ANSLUTNING/
FIXED CONNECTIONS
<125A | >125A

CEE-OUTLETS 3-POLE/230V
16A | 32A | 63A | 125A
2

SCHUKO OUTLETS 2-POLE/230V
16A

CEE-OUTLETS 5-POLE/400V
16A | 32A | 63A | 125A

JFB/RCCB
<0,03A | >0,3A | >0,03A & <0,3A
2

JFB/RCCB
Variable

VIKT/WEIGHT
21,5 kg

This drawing is property of El-Björn. May not be copied, shown or distributed without our written permission.

Alfa-II 400//(2)-2 EN

EL-BJÖRN
www.elbjorn.com

RITAD AV/DRAWN BY	DATUM/DATE	NEXT SHEET	SHEET
CG	170307	3	2
SIGN	REVISION/ISSUE	RITNINGS NR./DRAWING	
	A*	EB10082	

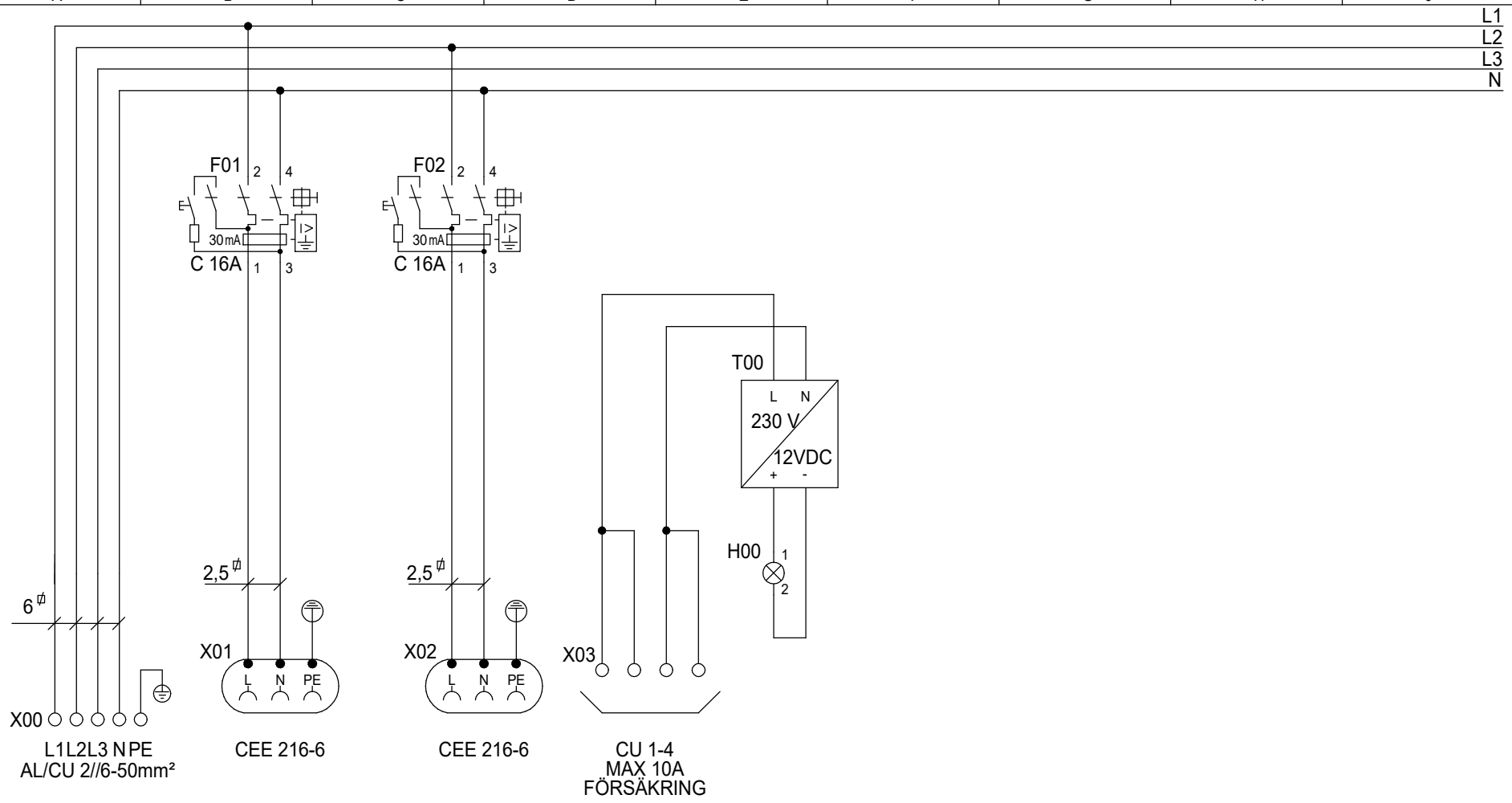

ARTIKELNR./ARTICLE NO.
EB10082

MÄRKSTRÖM/CURRENT RATING
32 A

MEASURING EQUIPMENT
CURR.-TRAFO-SPACE | ENERGY-METER-SPACE

FAST ANSLUTNING/FIXED CONNECTIONS
<125A | >125A

CEE-OUTLETS 3-POLE/230V
16A | 32A | 63A | 125A
2

SCHUKO OUTLETS 2-POLE/230V
16A

CEE-OUTLETS 5-POLE/400V
16A | 32A | 63A | 125A

JFB/RCCB
<0,03A | >0,3A | >0,03A & <0,3A
2

JFB/RCCB
Variable

VIKT/WEIGHT
21,5 kg

This drawing is property of El-Björn. May not be copied, shown or distributed without our written permission.

Alfa-II 400//(2)-2 EN

EL-BJÖRN
www.elbjorn.com

RITAD AV/DRAWN BY	DATUM/DATE	NEXT SHEET	SHEET
CG	170307	4	3
SIGN	REVISION/ISSUE	RITNINGS NR./DRAWING	
	A*	EB10082	

A	B	C	D	E	F	G	H	J	K

PC.	Position	Description	Type	Manufacturer .	Data	Article No.	E-number(SE)
1	-	Alfa-II Stolpe	Standard	El-Björn	18mod, IP44	H23395	
2	.	Contact Plate	1*216-6	El-Björn		195026	
2	F01, F02	RCBO	PKPM2-16/2/C/003-A	Eaton	C 16A, 30mA	108111	2162432
1	H00	LED Strip	AL-IEP2-NW	Agolux	4000-4500 Kelvin	2490353	
1	T00	LED Driver	SLT15-12VF-2	Agolux	12V DC, 1,25A, 15W	SLT15-12VF-2	
3	X00	Plint	KE 66	Ensto	AL/CU 2//6-50mm²		2673561
1		Plint	KE 66.2	Ensto	AL/CU 2//6-50mm²		2673562
1		Plint	KE 66.3	Ensto	AL/CU 2//6-50mm²		2673563
2	X01, X02	Paneluttag	216-6 (35223)	Mennekes	16A, 230V, IP44	851	
2	X03	Radplint	NSYTRV42	Schneider Electric	4mm²		2916254
2		Radplint	NSYTRV42BL	Schneider Electric	4mm²		2916255
1		Radplint	NSYTRV42PE	Schneider Electric	4mm²		2916257

ARTIKELNR./ ARTICLE NO.
EB10082

MÄRKSTRÖM/ CURRENT RATING
32 A

MEASURING EQUIPMENT
CURR.-TRAFO-SPACE | ENERGY-METER-SPACE

FAST ANSLUTNING/ FIXED CONNECTIONS
<125A | >125A

CEE-OUTLETS 3-POLE/230V
16A | 32A | 63A | 125A
2

SCHUKO OUTLETS 2-POLE/230V
16A

CEE-OUTLETS 5-POLE/400V
16A | 32A | 63A | 125A

JFB/RCCB
<0,03A | >0,3A | >0,03A & <0,3A
2

JFB/RCCB
Variable

VIKT/WEIGHT
21,5 kg

This drawing is property of El-Björn. May not be copied, shown or distributed without our written permission.

Alfa-II 400//(2)-2 EN

EL-BJÖRN
www.elbjorn.com

RITAD AV/DRAWN BY	DATUM/DATE	NEXT SHEET	SHEET
CG	170307		4
SIGN	REVISION/ISSUE	RITNINGS NR./DRAWING	
	A*	EB10082	